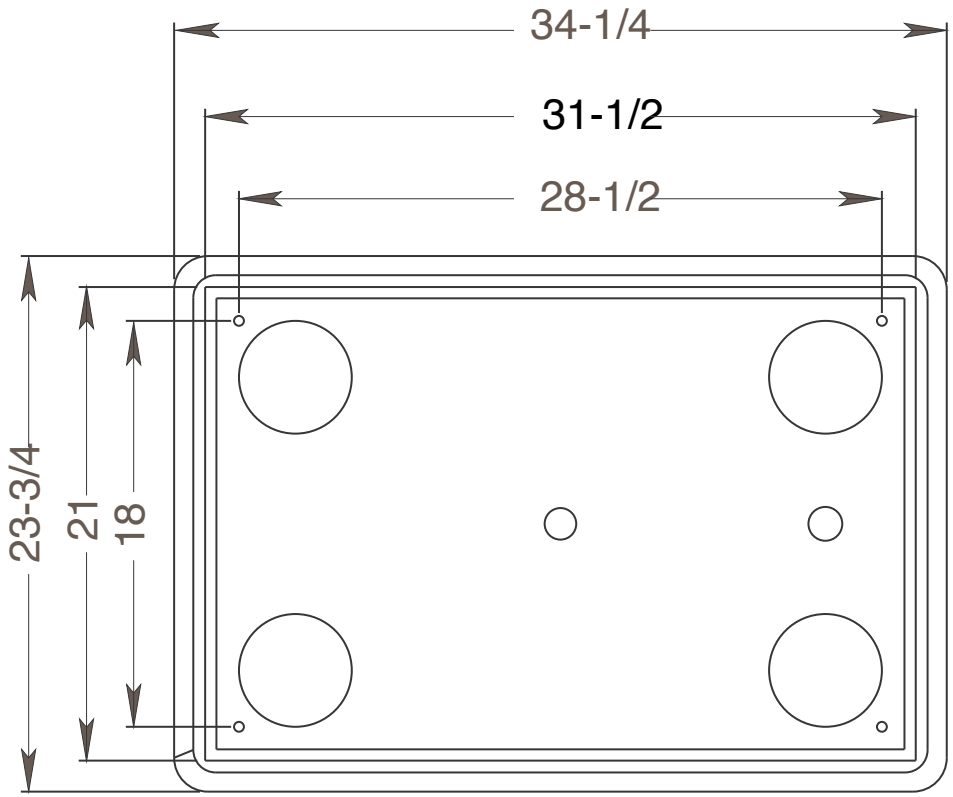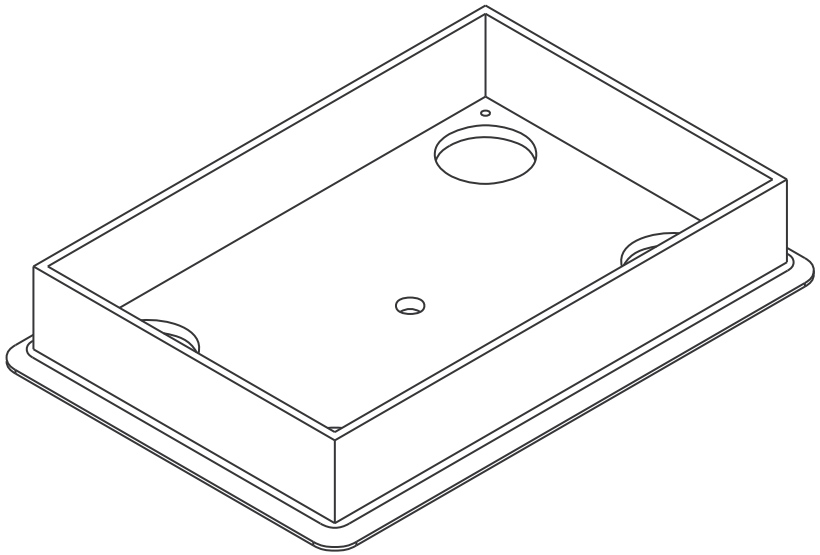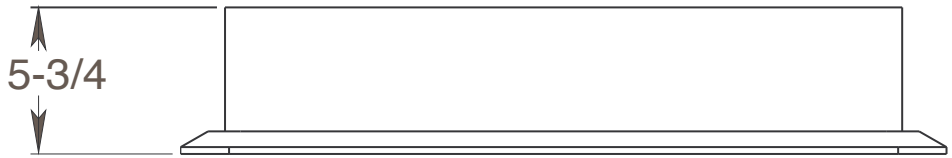LPO1 Light Platform Dimensions